加工精度	

Max Cutter Dia	ø100(4")
Reduction Ratio	1 : 1
Max Torque	300N.m
Max Power	15kw
Max Revolving	2000rpm
Main Spindle Steering	Right Turn

Pull Rod Select		BT(M16XP2.0)
		NT(M16XP2.0)
		NT(5/8")

Accessories: "T"-Screw X 4
M12XP1.75X71L

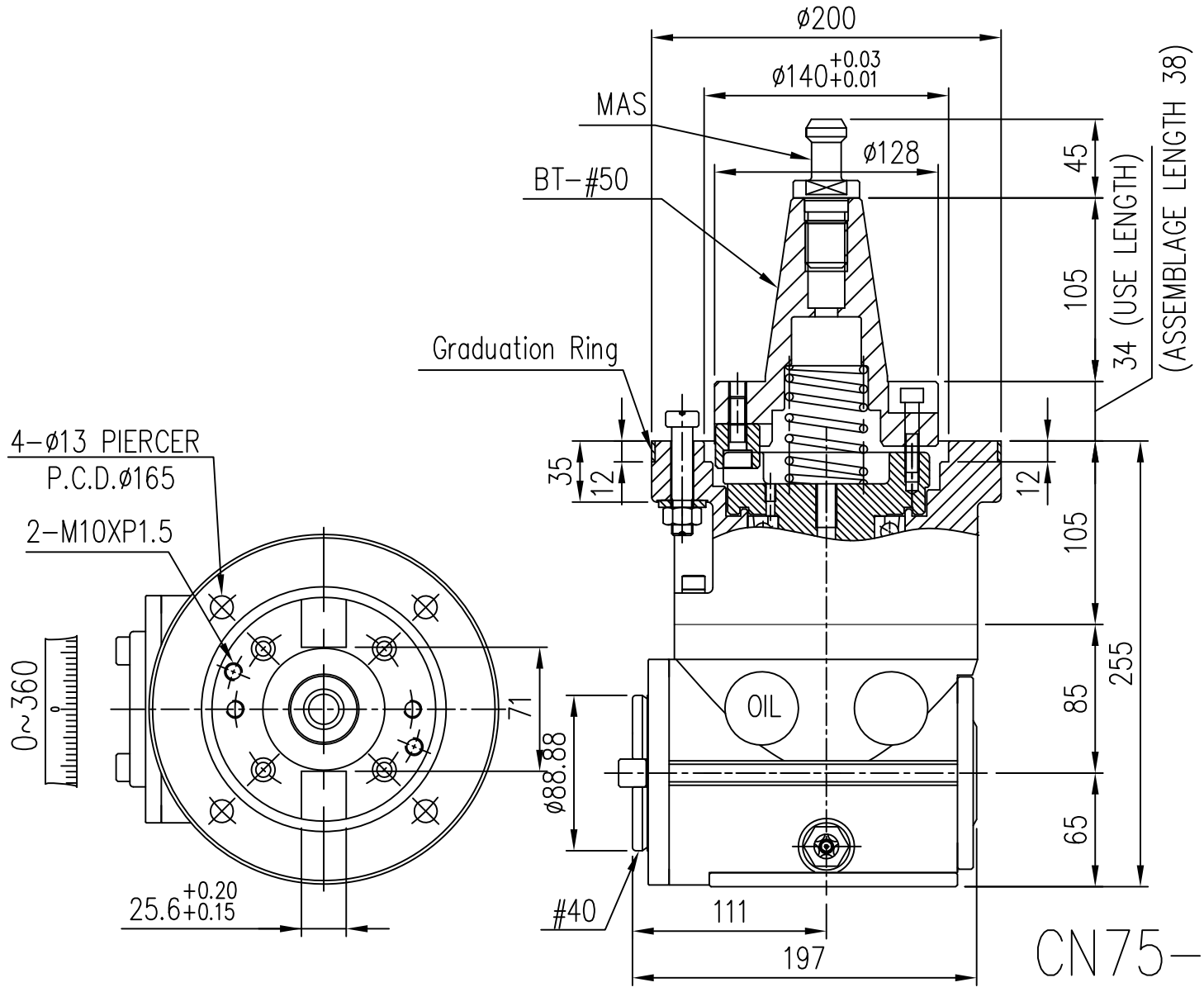

CN75-02(E)